IMCA-PM-007

Pole Mount Bracket

Specification

Parameters	
Application Model	SN-BK348, SN-BK349, SN-BK354, SN-BK355, SN-BK367
Material	Steel (Cold Rolled Sheet), Stainless steel
Color	White
Embrace Hoop Diameter	100 to 178 mm (3.94 to 7.0”)
Load Bearing	10 kg (22.0 lb.)
Product Dimensions	200 × 67.2 × 320 mm (7.87 × 2.65 × 12.6”)
Product Weight	3.2 kg (7.05 lb.)

Dimensions (mm)

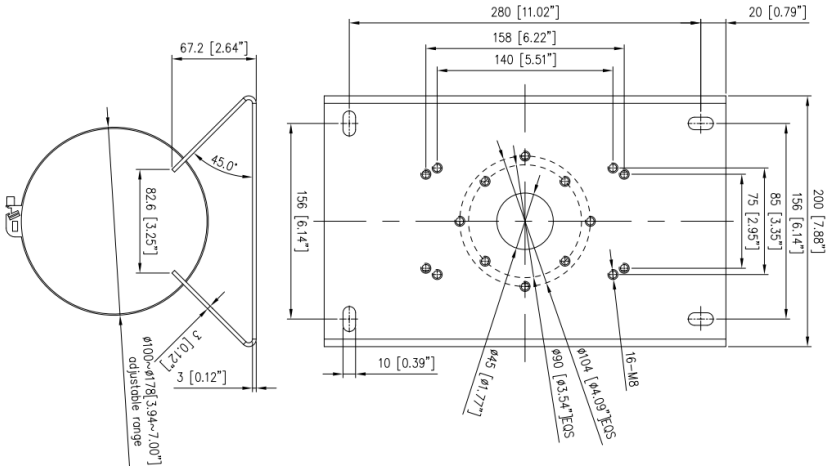

© 2024 All rights reserved. Design and specifications are subject to change without notice.