IMCA-JB-002

Junction Box with Turret

Specification

Parameter	
Applicable Model:	IP Camera: SN-IPRxxxxHCxx, SN-IPRxxxxCNxx, SN-IPRxxxxHZxx, HD Analog Camera: SN-E13xxHC, SN-E13xxHZ
Material	Aluminum alloy + Plastic
Color	White
Operating Humidity	0% - 90% RH
Load Bearing	3 kg (6.61 lb)
Product Dimensions	φ107 × 46mm (φ4.21 × 1.81")
Product Weight	0.34kg (0.75 lb)

Dimensions (mm)

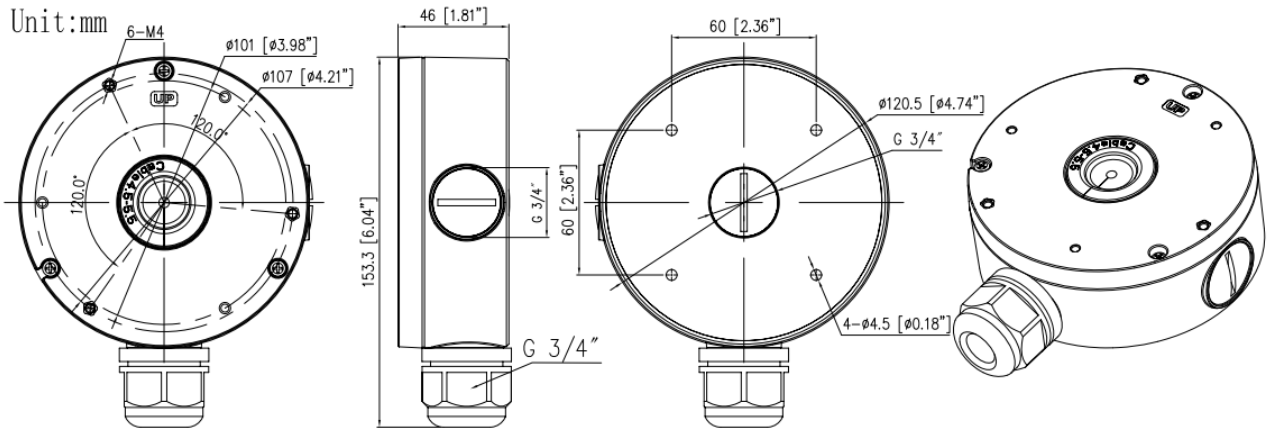

© 2024 All rights reserved. Design and specifications are subject to change without notice.